FILTRATION • DOSING • DETERGENT & HYGIENE • POOL EQUIPMENT

USER, MAINTENANCE, ASSEMBLY AND INSTALLATION MANUAL

FP2 / FP3 / FO3 CARTRIDGE FILTERS

Drinking water treatment equipment

The **FP2** and **FP3** are cartridge filters for drinking water, suitable for domestic use, to carry out a turbidity filtration treatment or for chlorine removal treatments, or for the dosage of antiscalant or similar products, such as polyphosphate salt.

FP2 / FP3 filters can contain cartridges of various kinds, depending on the type of treatment to be carried out on the incoming drinking water.
In particular, AQUA spa makes available for these filters:
- Wire wound cartridges (Mod. FA)
- Melt Blown polypropylene cartridges (Mod. FR-E; FR-N; FR-A)
- Washable mesh cartridges (Mod. RLA)
- Pleated cartridges (Mod. PL)
- Ultrafiltration cartridges (Mod. UF)
- Steel cartridges (Mod. AC)
- Activated carbon cartridges (Mod. CA; GAC; CTO; RLA-CA; FA-CA)
- Cartridges with polyphosphate salts (Mod. CP; RLA-CP)
- Iron removal cartridges (Mod. FE)
- Resin cartridges (Mod. RC; R-DEMI)

FILTRATION • DOSING • DETERGENT & HYGIENE • POOL EQUIPMENT

DECLARATION OF CONFORMITY OF THE EQUIPMENT

(art. 3 paragraph 2 DM 07/02/2012 n.25)

The undersigned manufacturer:

Society:	**AQUA S.p.A.**
Address:	**Via Tonino Crotti, 1 - 42018 - San Martino in Rio (RE) - ITALIA**

With reference to art. 3 paragraph 2 of Ministerial Decree no. 25 of 7 February 2012 declares the following regarding the following families of equipment:

FAMILY	MODEL
FILTERS FP2	MEASURES: 5" - 7" - 9"3/4 - 20"
FILTERS FP3	MEASURES: 5" - 7" - 9"3/4 - 20"
CARTRIDGES	MODELS: FA; FR-E; FR-N; FR-A; RLA; PL; UF; AC; CA; GAC; CTO; RLA-CA; FA-CA; CP; RLA-CP; FE; RC; R-DEMI

- Pursuant to Decree No. 174 of 06 April 2004 "Regulation concerning materials and objects that can be used in fixed systems for the collection, treatment, adduction and distribution of water intended for human consumption."
  1) To have performed and passed the global and / or specific migration tests required by the standard;
  2) To use only raw materials with monomers included in the positive list referred to in Annex IIIa and IIIb.
  3) To keep the test reports of the tests carried out at the company headquarters.

- In accordance with safety regulations, specific applicable regulations and specific purposes applicable to the equipment in question:
  1) To periodically carry out checks and tests for tightness and resistance;
  2) To periodically verify the maintenance of the regulatory and safety compliance conditions on the products in question.

San Martino in Rio (RE) li 18/january/2021

Davide Vezzani
Responsabile Certificazioni

AQUA S.p.A.
Società soggetta a direzione e coordinamento di Finanza Cooperativa S.c.p.a. - Cap. Soc. €5.641.000,00 Sottoscritto e Versato.
S. Martino in Rio - 42018 - Reggio Emilia (IT) - Sede legale: Via Crotti, 1. Sede operativa: Via Bersella, 3. - Cod. Fisc. e P.IVA: 02026440350.
Reg. Imprese di RE: 02026440350 - Ph. +39.0522.695805 - Fax +39.0522.646160 - www.aqua.it - E-mail: aqua@aqua.it

TECHNICAL DATA

These filters are suitable for containing various types of filter cartridges, in order to obtain the desired treatment on the drinking water entering the network.
The filters are available with transparent sumps and opaque sumps, in different heights, with different pipe connection sizes, with and without brass inserts and in two (FP2) or three (FP3) pieces.

WHITHOUT BRASS INSERTS

Modello / *Model*	Altezza / *Height*	Ingresso/ Uscita (c) / *Inlet/ Outlet (c)*	Modello / *Model*	Altezza / *Height*	Ingresso/ Uscita (c) / *Inlet/ Outlet (c)*
FP2	5”	1/4”F	FP3	5”	1/4”F
	7”			7”	
	9” 3/4			9” 3/4	
	20”			20”	
FP2	5”	3/8”F	FP3	5”	3/8”F
	7”			7”	
	9” 3/4			9” 3/4	
	20”			20”	
FP2	5”	1/2”F	FP3	5”	1/2”F
	7”			7”	
	9” 3/4			9” 3/4	
	20”			20”	
FP2	5”	3/4”F	FP3	5”	3/4”F
	7”			7”	
	9” 3/4			9” 3/4	
	20”			20”	
FP2	5”	1”F	FP3	5”	1”F
	7”			7”	
	9” 3/4			9” 3/4	
	20”			20”	

WITH BRASS INSERT

Modello / *Model*	Altezza / *Height*	Ingresso/ Uscita (c) / *Inlet/ Outlet (c)*	Modello / *Model*	Altezza / *Height*	Ingresso/ Uscita (c) / *Inlet/ Outlet (c)*
FP2	5”	1/2”F	FP3	5”	1/2”F
	7”			7”	
	9” 3/4			9” 3/4	
	20”			20”	
FP2	5”	3/4”F	FP3	5”	3/4”F
	7”			7”	
	9” 3/4			9” 3/4	
	20”			20”	
FP2	5”	1”F	FP3	5”	1”F
	7”			7”	
	9” 3/4			9” 3/4	
	20”			20”	
FP2	5”	1” 1/4F*	FP3	5”	1” 1/4F*
	7”			7”	
	9” 3/4			9” 3/4	
	20”			20”	
FP2	9” 3/4	1” 1/2F*	FP3	9” 3/4	1” 1/2F*
	20”			20”	

Testa *Head* ✱✱✱	PP caricato senza inserti in ottone *PP without brass inserts*
Vaso *Sump* ✱✱	SAN trasparente-PP caricato bianco *Transparent SAN-PP white*
O-Ring *O-Ring*	NBR 70 Sh A
Temperatura di esercizio *Working pressure* ✱	5°C + 50°C min./max
Portata a vuoto 2 BAR *Capacity (empty) at 2 BAR*	1/4”F 32,83 Lt./min. - 3/8”F 86,70 Lt./min. 1/2”F 106,60 Lt./min. - 3/4”F 108,50 Lt./min. 1”F 105,60 Lt./min.

✱ For FP2 HT Tmax 90°C; For FO3 Tmax 50-80-90°C
✱✱ For FP2 HT PBT+FV; For FO3 SAN-TROGAMID-ARNITE-INOX
✱✱✱ For FP2 HT PBT°C; For FO3 BRASS

MAX WORKING PRESSURE

TYPE	BAR
FP2/FP3	10
FP2/FP3 DUPLEX	10
FP2/FP3 TRIPLEX	10
FO3	8-12
FP2 ALL PP	6
FP2 HT	10
AQUA BIG	8

Their typical installation scheme is as follows:

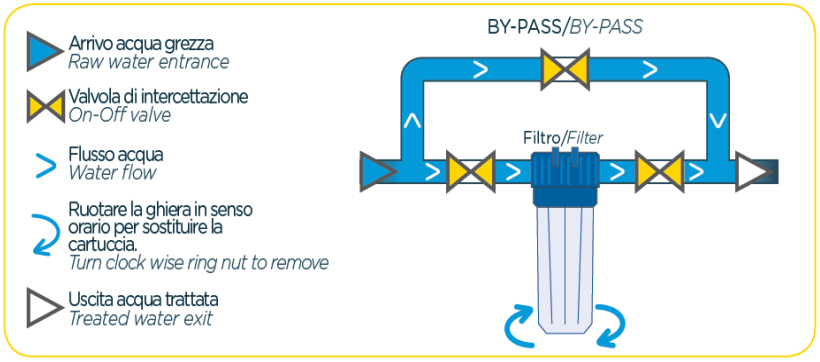

GENERAL WARNINGS

- This filter is an equipment for the treatment of drinking water made in compliance with the DM. 25/12 and DM. 174/04, the user must use it in full compliance with this manual in order to avoid potential risks to health or safety;
- This filter is suitable for the filtration and treatment of drinking water as defined by the competent authorities of the place of installation and, in any case, for liquids for food use, with PH close to neutral;
- Do not use in presence of water with unknown origin or microbiologically not pure, without providing for the use of an adequate disinfection system;
- Use the filters in compliance with the operating pressures declared by the manufacturer. With presence of high pressures in the circuit or "water hammer", protect the device by installing a pressure reducer upstream;
- Except for special filters, use the filters with liquids at room temperature (20-25°C), however within the limits indicated by the manufacturer. If used upstream of a boiler, it is recommended to install a non-return valve to prevent boiling water from entering the filter;
- Do not use the containers for the filtration of compressed air, oil or gas, even at low pressures.
- Do not use these filters in environments exposed to freezing temperatures or high temperatures. Therefore, installation outdoors or in places exposed to bad weather or ultraviolet rays is not recommended;
- This equipment requires regular periodic maintenance in order to ensure the maintenance of the drinking water requirements of the treated water.

INSTALLATION

The installation of the filter must be performed by qualified personnel capable of issuing a regular declaration of conformity.

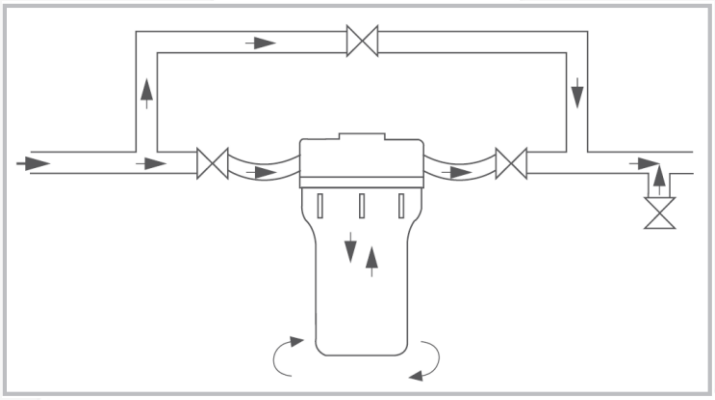

The typical filter assembly scheme is the one shown in the image alongside.

It is advisable to create a bypass to ensure maintenance of the filter cartridge without eliminating the supply of water to the users.

During the assembly phase it is important to respect the inlet / outlet direction (IN-OUT) indicated on the filter head. This is necessary to allow the cartridges to work correctly.

To install the filter on the wall, use the appropriate wall bracket (optional), which allows for correct fixing and proper spacing from the wall, necessary to ensure the opening of the filter with the use of the appropriate key.

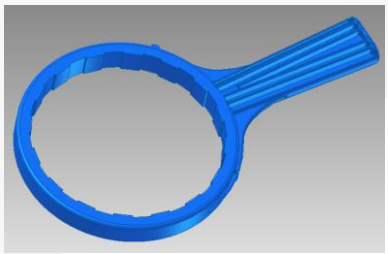

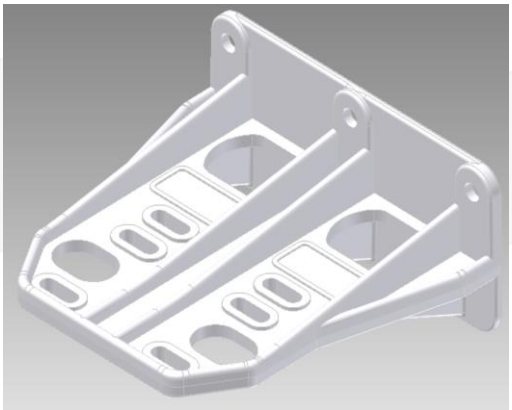

It is also important not to fix the filter too close to the floor, otherwise it becomes impossible or difficult to remove the cartridge when carrying out the necessary maintenance.

The minimum recommended distance from the wall is 80 mm.
The minimum distance from the floor is 25 mm. The recommended distance is instead of 100 mm (or more).

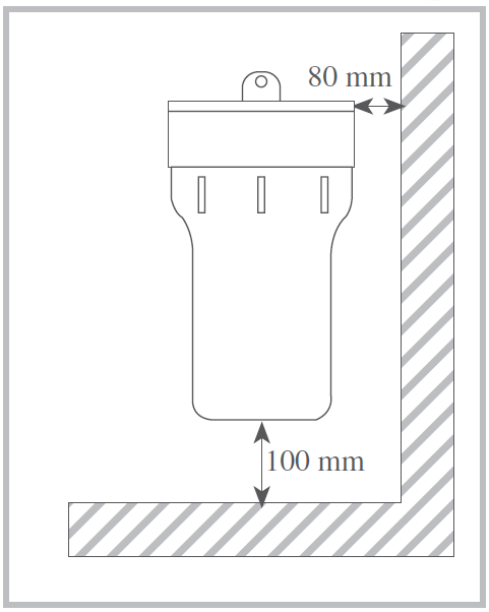

Depending on the size of the filter purchased, it is possible to determine the fixing point of the bracket using the following table, where the dimensions of the FP3 filter can also be deduced:

FP3 5"

A	B	C	D	E	F	G	H	I	L	M	N
120	172	1/4"F	41	33	ø3.8	101	206	ø6	8	145	85
120	172	3/8"F	41	33	ø3.8	101	206	ø6	8	145	85
122	182	1/2"F	41	33	ø3.8	101	216	ø6	8	145	85
122	182	3/4"F	41	33	ø3.8	101	216	ø6	8	145	85
122	188	1"F	41	33	ø3.8	101	222	ø6	8	145	85
126	205	1"1/4F	41	46	ø3.8	101	239	ø6	8	145	85
126	205	1"1/2F	41	46	ø3.8	101	239	ø6	8	145	85

FP3 7"

A	B	C	D	E	F	G	H	I	L	M	N
120	223	1/4"F	41	33	ø3.8	101	257	ø6	8	145	85
120	223	3/8"F	41	33	ø3.8	101	257	ø6	8	145	85
122	233	1/2"F	41	33	ø3.8	101	267	ø6	8	145	85
122	233	3/4"F	41	33	ø3.8	101	267	ø6	8	145	85
122	239	1"F	41	33	ø3.8	101	273	ø6	8	145	85
126	256	1"1/4F	41	46	ø3.8	101	290	ø6	8	145	85
126	256	1"1/2F	41	46	ø3.8	101	290	ø6	8	145	85

FP3 9"3/4

A	B	C	D	E	F	G	H	I	L	M	N
120	294	1/4"F	41	33	ø3.8	101	328	ø6	8	145	85
120	294	3/8"F	41	33	ø3.8	101	328	ø6	8	145	85
122	304	1/2"F	41	33	ø3.8	101	338	ø6	8	145	85
122	304	3/4"F	41	33	ø3.8	101	338	ø6	8	145	85
122	314	1"F	41	33	ø3.8	101	348	ø6	8	145	85
126	326	1"1/4F	41	46	ø3.8	101	360	ø6	8	145	85
126	326	1"1/2F	41	46	ø3.8	101	360	ø6	8	145	85

FP3 20"

A	B	C	D	E	F
120	553	3/8"F	41	33	ø3.8
122	563	1/2"F	41	33	ø3.8
122	563	3/4"F	41	33	ø3.8
122	569	1"F	41	33	ø3.8
126	586	1"1/4F	41	46	ø3.8
126	586	1"1/2F	41	46	ø3.8

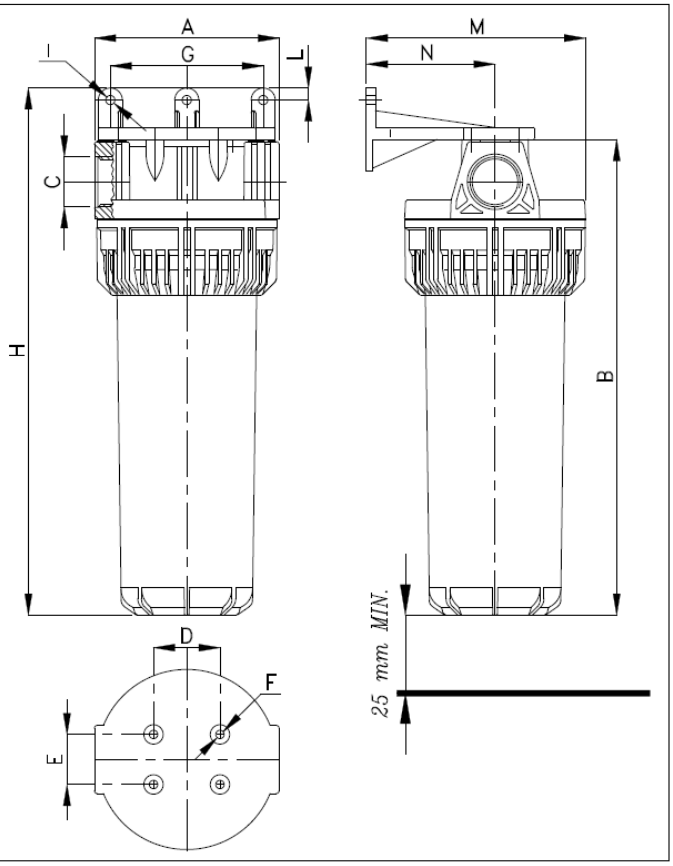

Similar considerations can be made for FP2 filters.
The relative dimensions can be found in the following table:

FILTRO SERIE AQUA FP2

FP2 5"

A	B	C	D	E	F
120	172	1/4"F	41	33	ø3.8
120	172	3/8"F	41	33	ø3.8
122	182	1/2"F	41	33	ø3.8
122	182	3/4"F	41	33	ø3.8
122	188	1"F	41	33	ø3.8
126	205	1"1/4F	41	46	ø3.8
126	205	1"1/2F	41	46	ø3.8

FP2 7"

A	B	C	D	E	F
120	223	1/4"F	41	33	ø3.8
120	223	3/8"F	41	33	ø3.8
122	233	1/2"F	41	33	ø3.8
122	233	3/4"F	41	33	ø3.8
122	239	1"F	41	33	ø3.8
126	256	1"1/4F	41	46	ø3.8
126	256	1"1/2F	41	46	ø3.8

FP2 9"3/4

A	B	C	D	E	F
120	293	1/4"F	41	33	ø3.8
120	293	3/8"F	41	33	ø3.8
122	303	1/2"F	41	33	ø3.8
122	303	3/4"F	41	33	ø3.8
122	309	1"F	41	33	ø3.8
126	325	1"1/4F	41	46	ø3.8
126	325	1"1/2F	41	46	ø3.8

FP2 20"

A	B	C	D	E	F
120	552	3/8"F	41	33	ø3.8
120	562	1/2"F	41	33	ø3.8
122	562	3/4"F	41	33	ø3.8
122	568	1"F	41	33	ø3.8
126	585	1"1/4F	41	46	ø3.8
126	585	1"1/2F	41	46	ø3.8

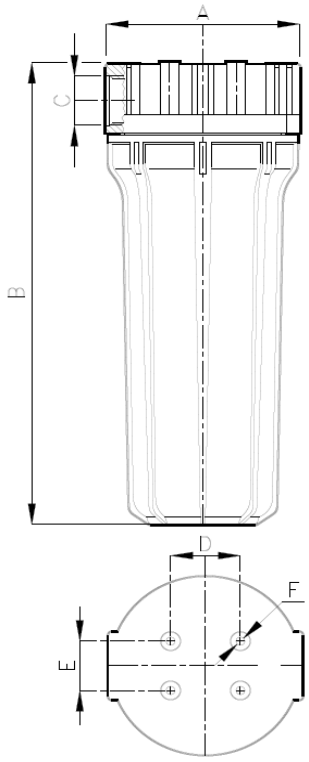

To connect the filters to the pipes, use flexible fittings to avoid possible tensions caused by the pipes.

It is, in fact, preferable not to connect the threaded pipes directly to the device. Pipes can be used for welding, pressure or with union.

Use fittings with cylindrical thread with GAS or BSP pitch. Do not use fittings with tapered threads.

When fixing the fittings to the head, avoid using sealing pastes, hardening liquids, silicone, hemp or other, but only Teflon tape.

After fixing, open the taps and check that there are no leaks or drips.

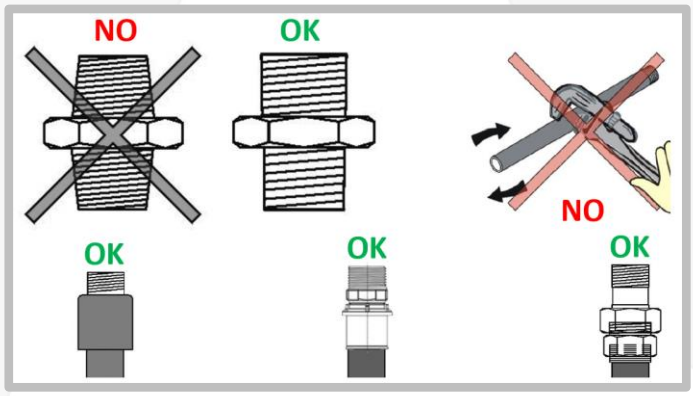

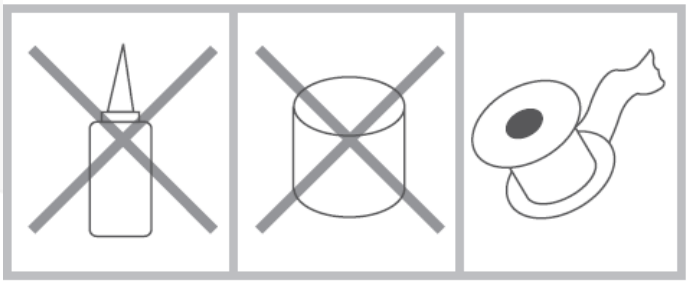

Teflon

AQUA S.p.A.
Società soggetta a direzione e coordinamento di Finanza Cooperativa S.c.p.a. - Cap. Soc. €5.641.000,00 Sottoscritto e Versato.
S. Martino in Rio - 42018 - Reggio Emilia (IT) - Sede legale: Via Crotti, 1. Sede operativa: Via Bersella, 3. - Cod. Fisc. e P.IVA: 02026440350.
Reg. Imprese di RE: 02026440350 - Ph. +39.0522.695805 - Fax +39.0522.646160 - www.aqua.it - E-mail: aqua@aqua.it

STARTING AND OPERATION OF THE FILTER

After fixing and connecting the filter to the water mains, you can start using it.

The first operation is to insert the cartridge inside the filter.

After closing the water, open the filter using the special key and insert the filter cartridge necessary for the chosen treatment inside it.

CAUTION: Remove the film or package that wraps the cartridge. If the cartridge has gaskets, make sure they are correctly positioned before closing the sump.

After placing the cartridge in the sump, put the O-Ring in its seat and screw the sump clockwise onto the head.

It is recommended to tighten tightly, but by hand (without using the key). If, once put into operation, drips occur, tighten further with the aid of the key.

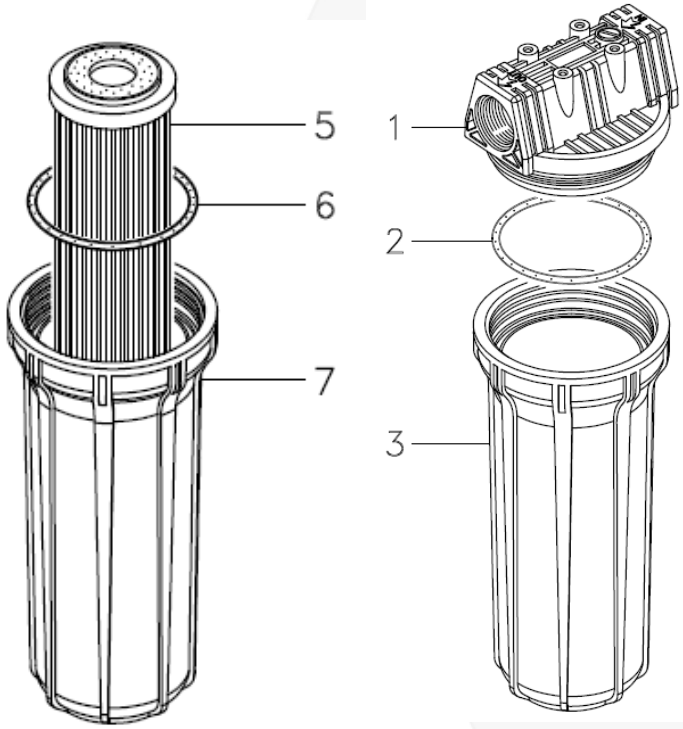

Re-open the water, check that there are no drips and vent the vessel by slightly opening the vent screw on the head (or by pressing the appropriate button if present).

Let the water flow from a tap for a few minutes, in order to evacuate all the air and remove any dust or dirt present in the filter, even after its assembly.

After these operations the filter is running regularly.

These operations must be repeated every time the filter cartridge is replaced or serviced.

CLEANING AND MAINTENANCE

ATTENTION: This equipment requires regular periodic maintenance in order to ensure the potability requirements of the treated drinking water and the maintenance of improvements as declared by the manufacturer.

In particular, periodic cleaning and maintenance operations are required, especially the filter cartridge.

The filter must be cleaned only with a sponge and running water, every time the filter cartridge is replaced or cleaned. Do not use detergents, solvents, alcohol, detergents or anything else that can affect the structure of the plastic material and / or affect the potability of the treated water.

Replace the container sump in the event of a collision or if it falls to the ground. The sump (especially the transparent one) is in fact made of fragile material, which tends to crack or chip in the event of a collision. These micro-cracks can lead to the sudden rupture of the vessel once put under pressure or once subject to water hammer.

When reassembling the sump, check that the O-Ring is not deteriorated (or pinched) and that it is positioned correctly in its seat.

If the water is not used for several weeks, it is advisable to remove the cartridge from the container. Before reinstalling the filter cartridge, wash it thoroughly and sterilize it, or fit a new cartridge.

At the end of all maintenance operations, it is advisable to let the water run for a few minutes before using it.

To carry out maintenance, follow the steps below:
- Divert the passage of water from the filter, by acting on the by-pass (if present) or by closing the water taps;
- Act on the screw or on the vent button, in order to reduce the internal pressure of the filter;
- Place a low container on the floor to collect the water that will drip from the filter when it is opened, or some rags to collect the water;
- Disassemble the sump using the special plastic key. Be careful not to drop the sump. It is sensitive to shocks;
- Be careful not to lose the O-Ring and check that it is not damaged. Otherwise, recover a new O-Ring;
- Remove the cartridge and eliminate any dirt present in the vessel, inside the head or on the O-Ring.
- Place a new cartridge or the removed cartridge (if washable) in the sump after cleaning it, taking care to position the gaskets correctly, if present;
- Screw the sump onto the head (by hand);
- Reactivate the water network by keeping the vent valve open until all the air present in the network has escaped, after which close the vent valve.
- If the filter shows dripping tighten the sump with the key;
- Regardless of the type of cartridge used, at the end of each cleaning or maintenance operation, let the water run for a few minutes before using it.

The frequency of intervention is linked to the type of cartridges used:

CARTRIDGES FOR SEDIMENTS: (wire wound, Melt Blown, pleated, RLA, etc.):
Replace or wash the sediment cartridges within 2-5 months, or if necessary, if a significant pressure drop is detected. Washable cartridges (RLA) can be used multiple times.
They must be washed and disinfected periodically, as specified below.
1). Wash thoroughly under running water.
2). Immerse the cartridge in disinfectant that does not alter / corrode the structure of the cartridge itself, for 5 (five) minutes.
3). Remove the cartridge from the disinfectant liquid and rinse thoroughly.
The polypropylene cartridges (Melt Blown) must be thoroughly washed before installation, to eliminate the residues of the antistatic compound used for processing of the fibers.

CARBON CARTRIDGES:
Replace the active carbon cartridges within 3-4 months, or if necessary if you perceive a taste of chlorine, bad smells or tastes.
Before installing a new cartridge, rinse thoroughly to remove any carbon dust residues.

SALT POLYPHOSPHATE:
Replace the polyphosphate salt cartridges within 4-6 months or, in any case, when the polyphosphate salt is exhausted.

In case of replacement of cartridges or of the entire filter, follow the correct disposal rules provided by the state or region in which the product is installed.
In general, these rules prescribe:
- CARTRIDGES: disposal as unsorted waste as it is dirty or soiled material;
- FILTERS AND VASES: recycling with plastic products as they are made of polypropylene. However, any metal parts must first be removed.

WARRANTY

The product is guaranteed in accordance with the provisions of the AQUA SPA “General Conditions of Sale” document.
The details of the guarantee provide that:
- The item is used according to the instructions given by the manufacturer;
- Installation and maintenance are carried out following the manufacturer's instructions;
- The replacement under warranty is made only against the return of defective material, and after verifying the nature of the defect;
- The warranty is intended limited to the replacement of the part recognized as defective, and excludes any other right by the Purchaser to compensation for direct or indirect damage caused from the product itself.
- The buyer agrees to pay all labor and transport costs necessary to replace the product covered by the warranty.
- Failure to comply with the general rules indicated, as well as the neglect of the rules in force in Europe, will void any warranty on AQUA products.

L0200681 - REV0

AQUA S.p.A.
Società soggetta a direzione e coordinamento di Finanza Cooperativa S.c.p.a. - Cap. Soc. €5.641.000,00 Sottoscritto e Versato.
S. Martino in Rio - 42018 - Reggio Emilia (IT) - Sede legale: Via Crotti, 1. Sede operativa: Via Bersella, 3. - Cod. Fisc. e P.IVA: 02026440350.
Reg. Imprese di RE: 02026440350 - Ph. +39.0522.695805 - Fax +39.0522.646160 - www.aqua.it - E-mail: aqua@aqua.it